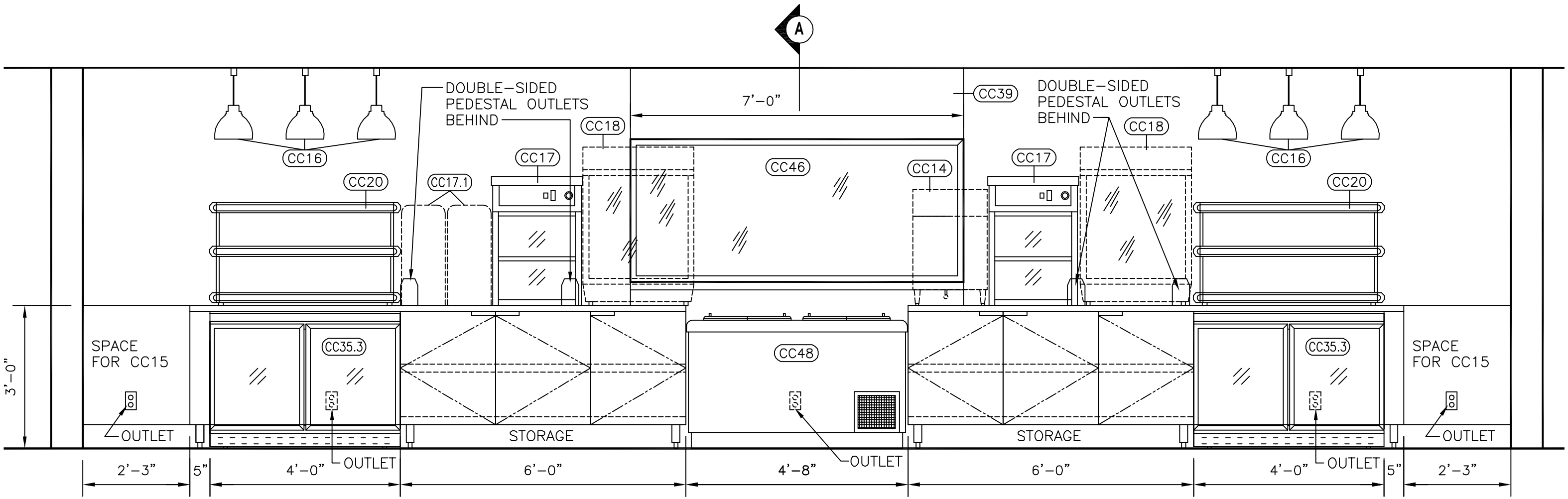

04.41.02 & 04.87.02 - FRONT OF BACK COUNTER